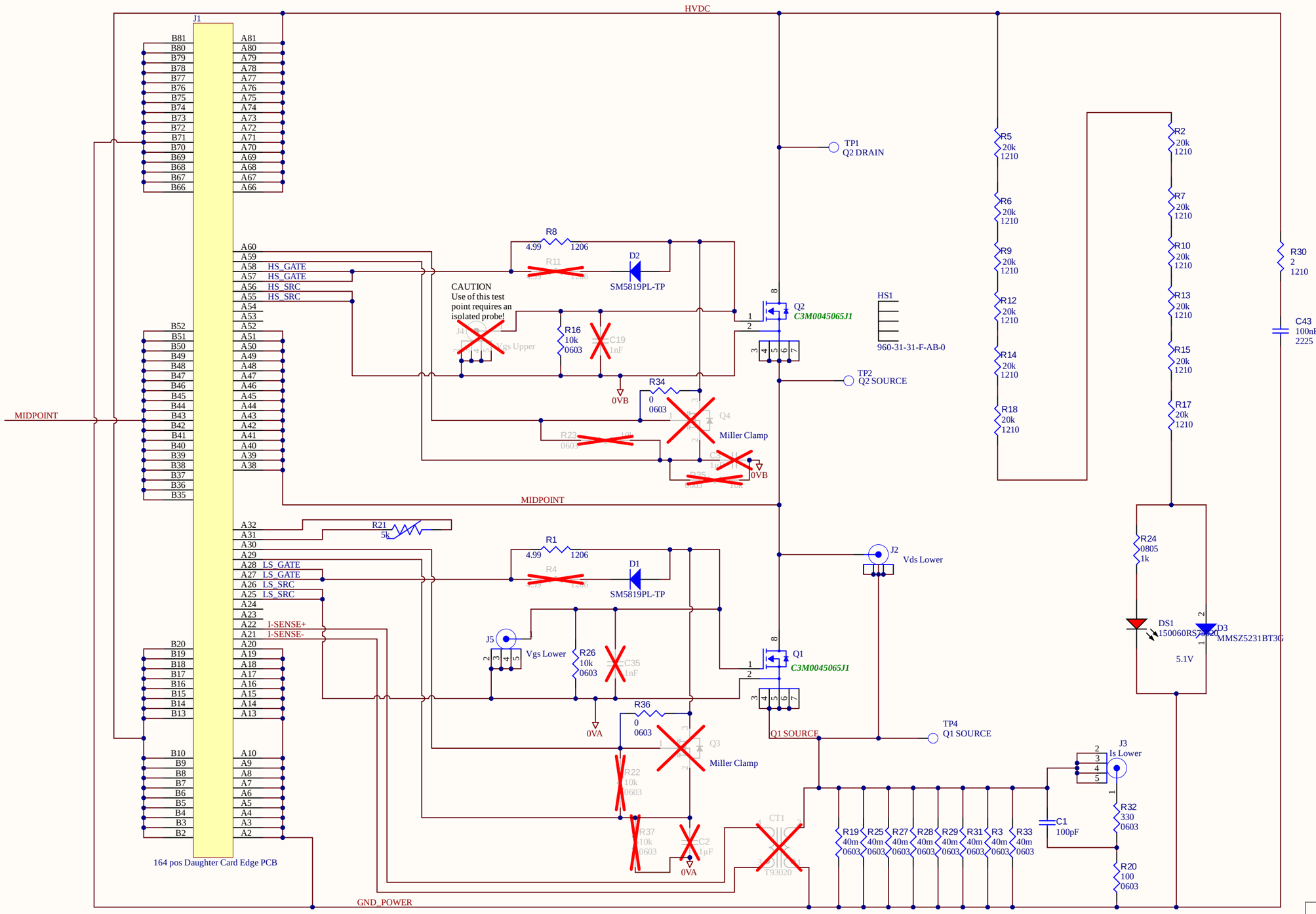

Final Assembly Packaging and Mechanical Items:

H2 Wolfspeed PCB SN Label

Notes:
1. NP = do not populate.
2. R35 and R37 share the same footprint as C3 and C2. C3 and C2 are only populated when using the Miller clamp circuit.

Wolfspeed

C3M0045065J1 Variant of J1

Title:	J1 Package Evaluation Board
Drawing No:	PWR-MM-J1-J1_SCH
Date:	Mar. 2023
Size:	B
Revision:	3.1
Sheet:	1 of 1